1 KW 2M LDMOS Custom Amplifier

Here's a list of all major features built into this amplifier:

- Compact cabinet design (6 x 12 x 12 inches)
- VSWR and over-temperature protection
- Analog metering for voltage and current, with peak-reading LED bar graph meters for forward and reflected power (relative power indicators)
- T/R and LNA sequencing based on IC-9700 control
- Current-limited rear-panel LNA 12v or 28v power feed
- Rear panel N connector for LNA signal input
- 13 db transmit-side input attenuator
- Temperature-controlled cooling fans
- Reverse polarity protection
- Front-panel switch for turning on an external power supply

When doing the initial setup, I calibrated the LED power meters, tested the high SWR lockout, high-temperature lockout, and LNA power feed.

The high SWR lockout is set to lock out the amplifier if it detects more than 100w reflected power. It can be adjusted for more (or less) sensitivity, but this is the recommended setting.

At 1kw out, the amplifier draws 29 amps at 50v. There is little to be gained by running it much above that, so I recommend setting up the drive power for 29 amps when driven in CW or FM mode.

Output power (w)	Amps @ 50v	FWD LED display
500	20	6 green
750	24	7 green 1 ½ red
1000	29	7 green + 3 red
1200	31	7 green + 3 red

If you will be using a remote LNA you should be aware the LNA power supply feed will be active whenever the amplifier's power supply is on, the external LNA setting on the IC-9700 is on and the front panel LNA switch on the amplifier is set to LNA. The radio will also have to be in receive mode (in transmit mode the LNA will be switched out by the IC-9700).

The LNA relay power feed is configured for 28v. 12v power is also available for the LNA itself on pin 2 of the rear panel LNA connector. Max combined current for relays and LNA is 1 amp, and those outputs are current-limited. This was done to protect the power feed and your remote wiring from accidental shorts, which can happen with remote LNA's.

1 KW 2M LDMOS Custom Amplifier

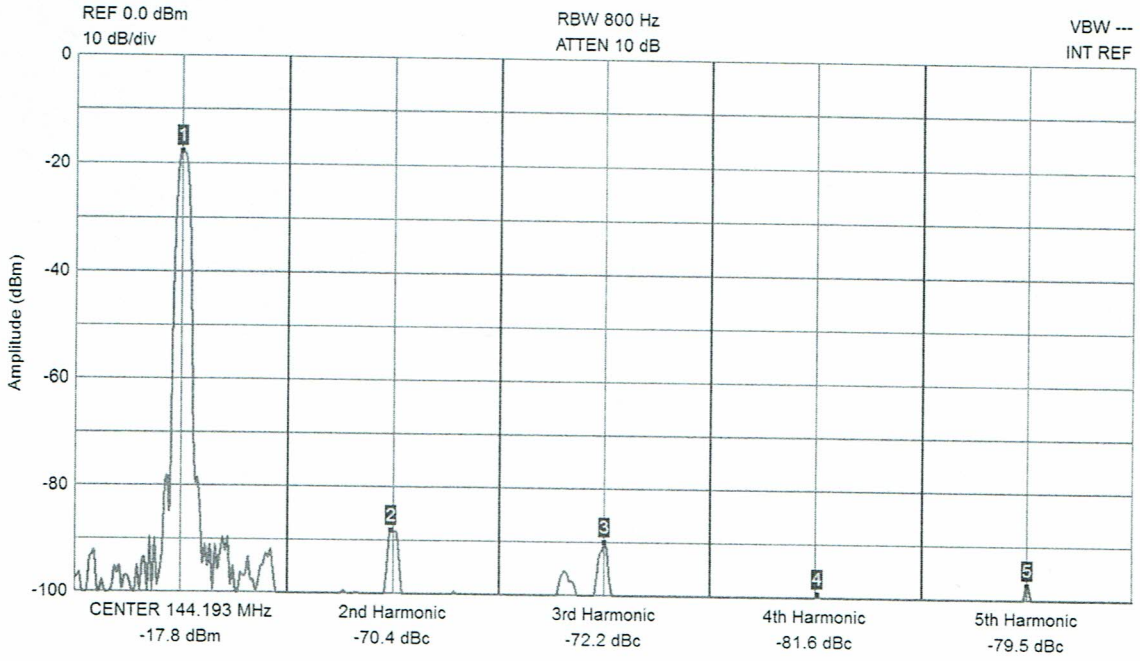

Harmonic content measured at 1kw out:

Final notes:

When connecting to your power supply, make certain of these connections:

RED wire goes to 50v POSITIVE (use an in-line 35 amp automotive fuse for safety)

BLACK wire goes to GROUND (50v NEGATIVE)

BLUE wires are connected to the front panel power switch and can be used to turn your power supply on and off.

The power switch in the amplifier is rated at 15 amps and is protected from high inrush currents (common to switching supplies) by a 15 ohm high-power resistor. As the capacitors in the power supply charge and the inrush current subsides, the 50v output of the power supply rises enough to operate the bypass relay, which then closes and bypasses the limiting resistor. This all happens in less than a second.

1 KW 2M LDMOS Custom Amplifier
connections to your external power supply

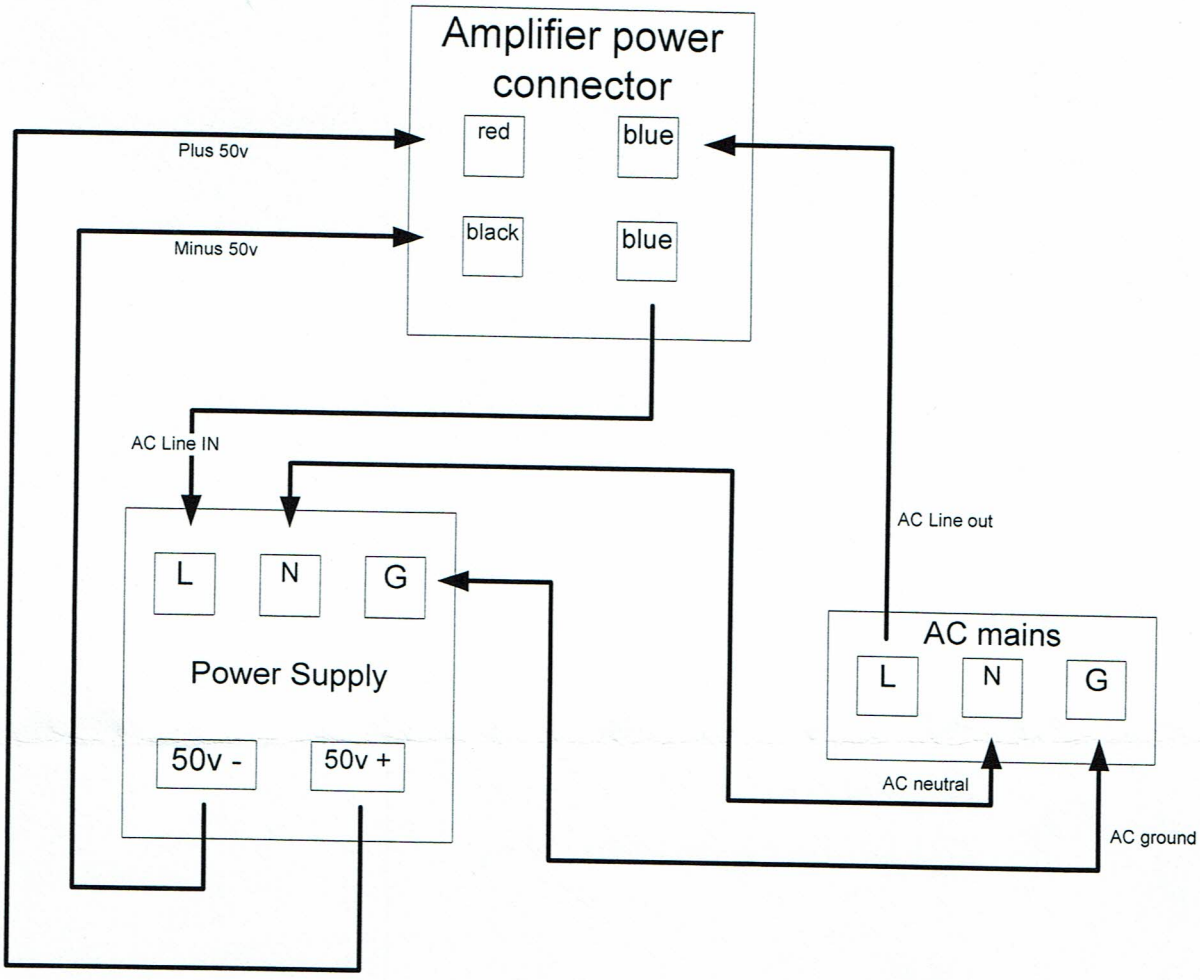

1kw 2m EME Amplifier with LNA support for IC9700

simplified system overview

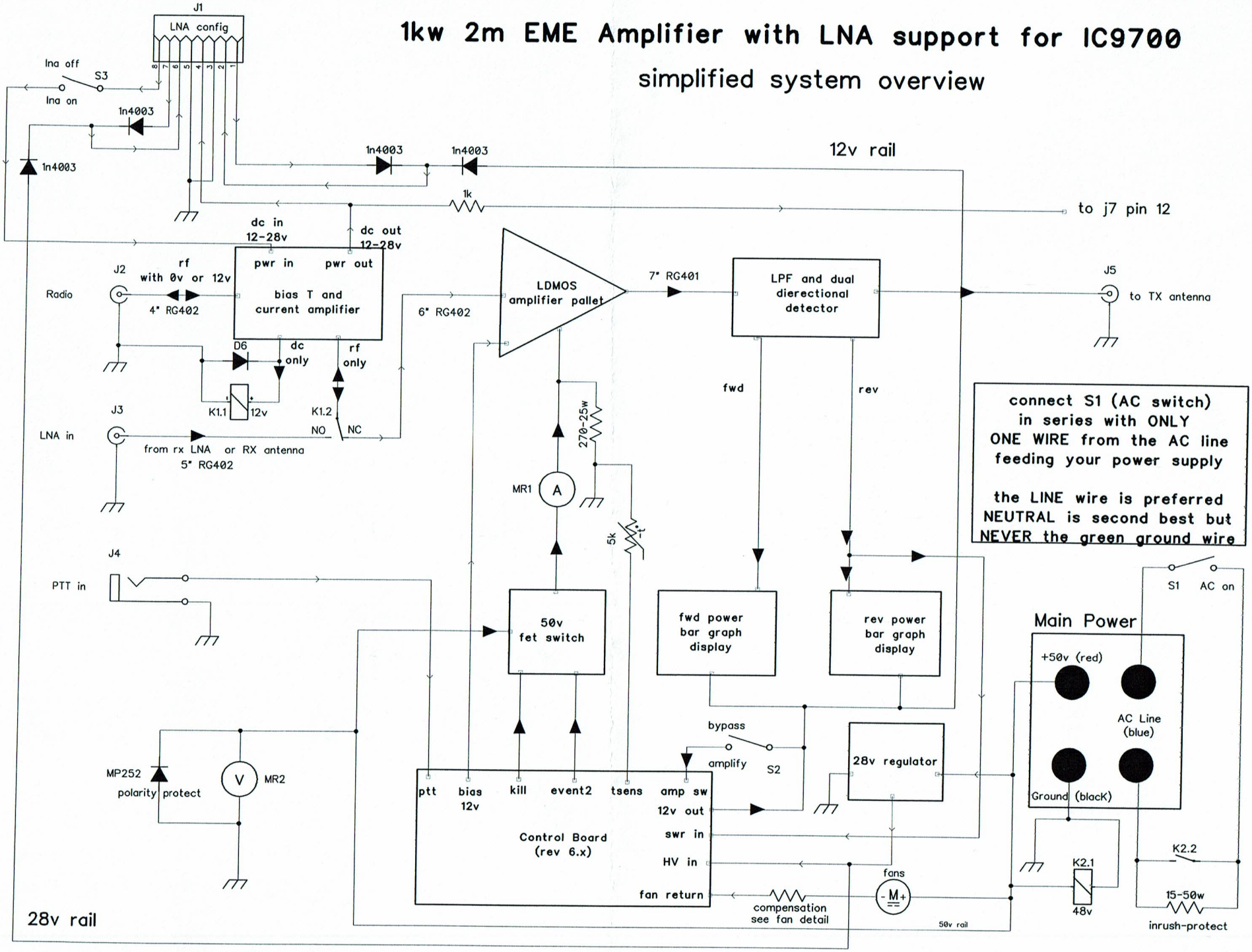

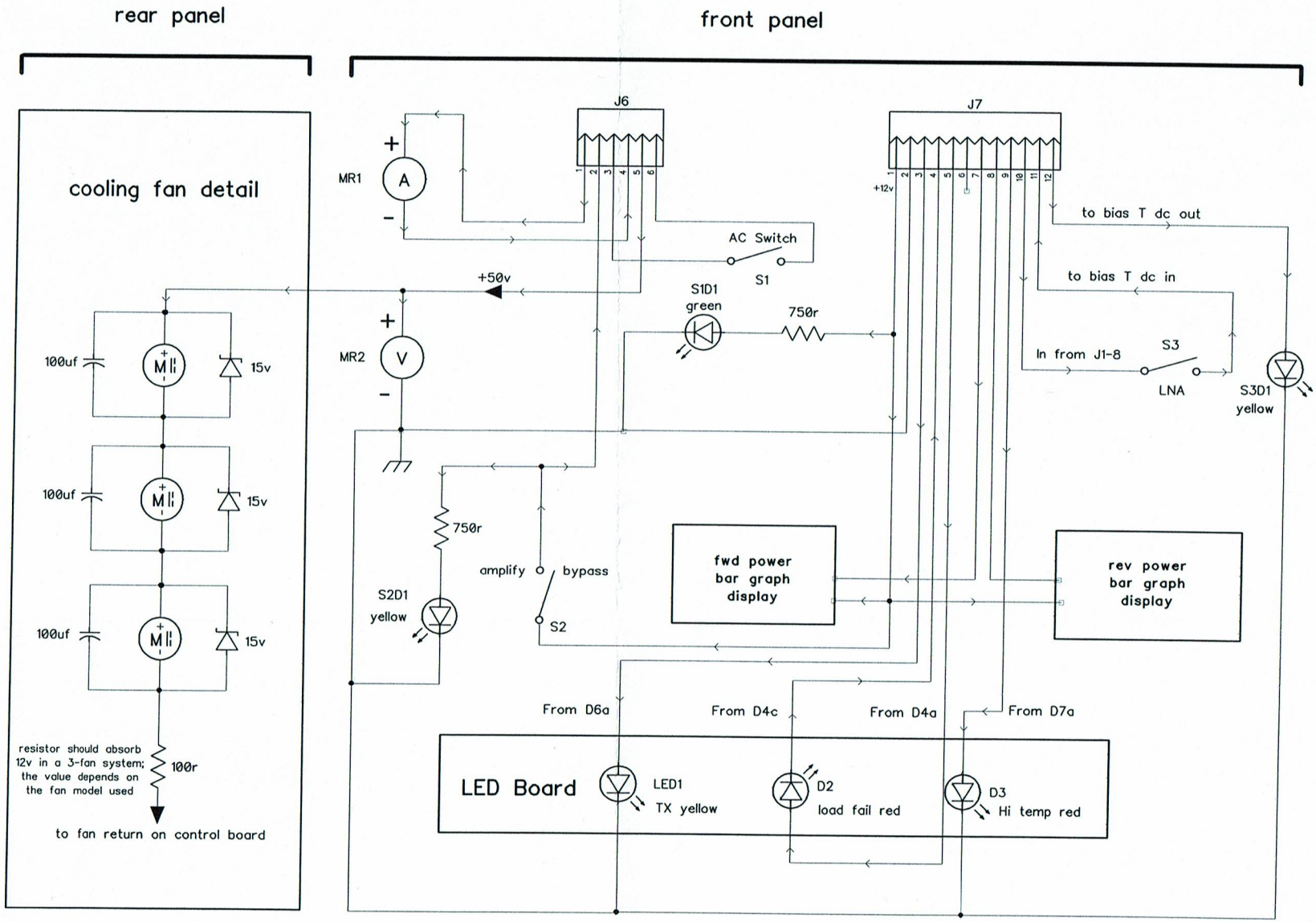
rear panel
front panel
cooling fan detail
100uf
15v
100uf
15v
100uf
15v
resistor should absorb 12v in a 3-fan system; the value depends on the fan model used
100r
to fan return on control board
J6
J7
MR1
A
MR2
V
+50v
AC Switch
S1
S1D1
green
750r
+12v
to bias T dc out
to bias T dc in
In from J1-8
S3
LNA
S3D1
yellow
750r
amplify
bypass
S2
S2D1
yellow
fwd power bar graph display
rev power bar graph display
From D6a
From D4c
From D4a
From D7a
LED Board
LED1
TX yellow
D2
load fail red
D3
Hi temp red

possible configurations of the external LNA connector plug (rear view of the plug)

maximum available LNA current is 1 amp in any configuration

Configured to use only internal amplifier +28v power for LNA

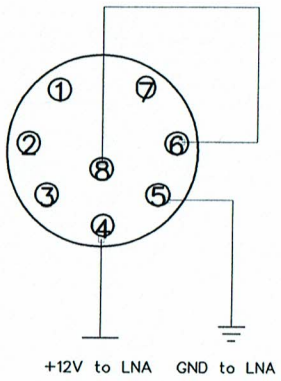

Configured to use only internal amplifier +12v power for LNA

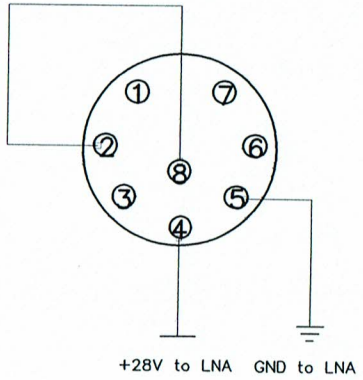

Configured to use either internal or external +28v for the external LNA. This allows the LNA to be used even when the amplifier power supply is switched off

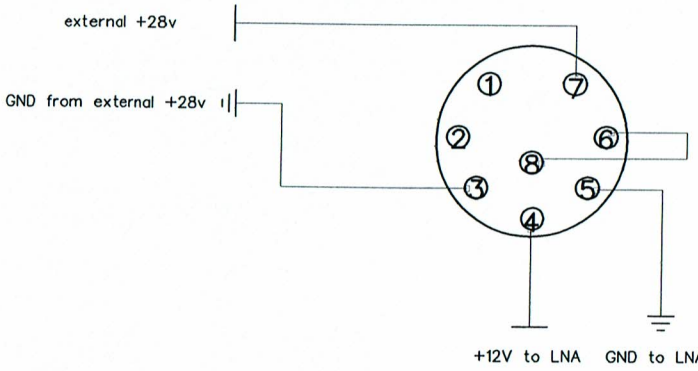

Configured to use either internal or external +12v for the external LNA. This allows the LNA to be used even when the amplifier power supply is switched off

